Network | Dome

PND-A6081RF

2MP AI IR Dome Camera

Key Features

- Maximum 2MP resolution, Up to 120fps
- 0.007Lux@F1.3, 1/30sec. (Color), 0Lux (B/W, IR LED on)
- Day & Night (ICR), WDR (120dB), WiseNR II (Using AI engine)
- H.265, H.264, MJPEG, WiseStream II , WiseStream III (Using AI engine)
- Video Analytics based on AI
- Object detection and classification (Person, Face, Vehicle, License Plate)
- Face mask detection, Social distancing detection
- Attribute, BestShot
- TPM with FIPS 140-2 level2, Secure boot, Verify firmware forgery
- System requirements
- SSM v2.10.8 or later, Genetec plugin v1.0 or later, Milestone plugin v1.0.2 or later, NVR model (XRN-6410DB4/B4, XRN-3210B4)
- Hard-coated dome bubble, IP52, IK10, Plenum rate

Compatible Accessories (Optional)

Occupancy Monitoring Application

SPB-FCD85W

Design and specifications are subject to change without notice. The latest product information / specification can be found at HanwhaVision.com.
Hanwha Vision is formerly known as Hanwha Techwin.

© Hanwha Vision CO., LTD. All rights reserved.

PND-A6081RF

2MP AI IR Dome Camera

Specifications

Video	
Imaging Device	1/2" CMOS
Resolution	1920x1080, 1280x1024, 1280x960, 1280x720, 1024x768, 800x600, 800x448, 720x576, 720x480, 640x480, 640x360
Max. Framerate	H.265/H.264: Max. 60/50fps(60Hz/50Hz, AI analytics on), Max. 120/100fps(60Hz/50Hz, AI analytics off) MJPEG: Max. 15fps/12fps(60Hz/50Hz)
Min. Illumination	Color: 0.007Lux(F1.3, 1/30sec, 30IRE) B/W : 0.0007Lux(F1.3, 1/30sec, 30IRE), 0Lux(IR LED on), 30/25fps Color: 0.014Lux(F1.3, 1/60sec, 30IRE) B/W : 0.0014Lux(F1.3, 1/60sec, 30IRE), 0Lux(IR LED on), 60/50fps Color: 0.028Lux(F1.3, 1/120sec,30IRE) B/W : 0.0028Lux(F1.3, 1/120sec, 30IRE), 0Lux(IR LED on), 120/100fps
Video Out	CVBS: 1.0 Vp-p / 75Ω composite, 720x480(N), 720x576(P) for installation USB: Micro USB Type B, 1280x720 for installation

Lens	
Focal Length (Zoom Ratio)	4.38~9.33mm(2.13x) motorized varifocal
Max. Aperture Ratio	F1.3(Wide)~F2.15(Tele)
Angular Field of View	H:103.1°(Wide)~44.5°(Tele) / V:54.2°(Wide)~24.9°(Tele) / D:124°(Wide)~51.1°(Tele)
Min. Object Distance	0.5m(1.64ft)
Focus Control	Simple focus
Lens Type	P iris

Pan / Tilt / Rotate	
Pan / Tilt / Rotate Range	0-~360- / -45-~85- / 0-~355-

Operational	
Camera Title	Displayed up to 85 characters
Day & Night	Auto(ICR)
Backlight Compensation	BLC, WDR, SSDR
Wide Dynamic Range	120dB
Digital Noise Reduction	WiseNR II (using AI engine) SSNR V
Digital Image Stabilization	Stabilization Support(built-in gyro sensor)
Motion Detection	8ea, polygonal zones
Privacy Masking	6ea, rectangle zones - Color: Gray/Black/White
Gain Control	Low / Middle / High
White Balance	ATW / AWC / Manual / Indoor / Outdoor
LDC	Support
Electronic Shutter Speed	Minimum / Maximum / Anti flicker (1/5~1/12,000sec) Auto prefer shutter control based on AI engine

Design and specifications are subject to change without notice. The latest product information / specification can be found at HanwhaVision.com.
Hanwha Vision is formerly known as Hanwha Techwin.

© Hanwha Vision CO., LTD. All rights reserved.

Video Rotation	Flip, Mirror, Hallway view(90-/270-)
Analytics	Classified object type: Person/Face/Vehicle/License plate Attributes: Person(Gender, Color and Bag), Face(Age, Gender, Mask and Glasses), Vehicle(Type: car/bus/truck/motorcycle/bicycle and Color) Support BestShot per object Analytics events based on AI engine - Object detection, Virtual line*(Crossing/Direction), Virtual area*(Loitering/Intrusion/Enter/Exit), Face mask detection, Social distancing detection, Slip&Fall detection Analytics events - Defocus detection, Motion detection, Tampering, Audio detection, Sound classification, Shock detection, Virtual area(Appear/Disappear) Support WiseDetector for Adding custom objects *Some of the video analytics only works with people and vehicle detection
Business Intelligence	People/Vehicle/Crowd counting, Queue management, Heatmap based on AI engine
Alarm I/O	2 configurable I/O ports, DC 12V output(Max. 50mA)
Alarm Triggers	Analytics, Network disconnect, Alarm input, App event, Time schedule, MQTT subscription
Alarm Events	When alarm trigger occurred - File upload(image): e-mail/FTP - Notification: e-mail - Recording: SD/SDHC/SDXC or NAS recording at event triggers - Alarm output - Handover: PTZ preset, send message by HTTP/HTTPS/TCP - Audio clip playback - MQTT: publication
Audio In	Selectable(mic in/line in)
Audio Out	Line out
Light Type	IR LED (850nm)
IR Viewable Length	WiseIR 40m(131.23ft)

Network	
Ethernet	Metal shielded RJ-45(10/100/1000 BASE-T)
Video Compression	H.265/H.264: Main/High, MJPEG
Audio Compression	G.711 u-law /G.726 Selectable G.726(ADPCM) 8KHz, G.711 8KHz G.726: 16Kbps, 24Kbps, 32Kbps, 40Kbps AAC-LC: 48Kbps at 16KHz
Smart Codec	Manual(5ea area), WiseStream II , WiseStreamIII(using AI engine)
Video Quality Adjustment	H.264/H.265: Target bitrate level control MJPEG: Target bitrate level control
Bitrate Control	H.264/H.265: CBR or VBR MJPEG: VBR
Streaming	Unicast(6 users) / Multicast Multiple streaming(Up to 6 profiles)
Protocol	IPv4, IPv6, TCP/IP, UDP/IP, RTP(UDP), RTP(TCP), RTCP,RTSP, NTP, HTTP, HTTPS, SSL/TLS, DHCP, FTP, SMTP, ICMP, IGMP, SNMPv1/v2c/v3(MIB-2), ARP, DNS, DDNS, QoS, UPnP, Bonjour, LLDP, SRTP (TCP, UDP Unicast), MQTT
Application Programming Interface	ONVIF Profile S/G/T/M SUNAPI(HTTP API) Hanwha Vision Open Platform WiseAI application included Oncloud edge recording, compatible with Hanwha Vision's Micro SD cards up to 1TB

Security	
OS / Firmware Protect	Encrypted Firmware, Secure boot, Signed Firmware
User authentication	Digest Authenticaton, Prevent brute-force attack
Network authentication	IEEE 802.1X (EAP-TLS, EAP-LEAP, EAP-PEAP, MSCHAPv2)
Secure Communication	HTTPS, WSS (WebSocket Secure)
Access Control	IP-based access control
Data Protect	Encryption Credentials, Encrypt compress for live recording file

Design and specifications are subject to change without notice. The latest product information / specification can be found at HanwhaVision.com.
Hanwha Vision is formerly known as Hanwha Techwin.

© Hanwha Vision CO., LTD. All rights reserved.

Audit	Access / System / Event Log management
Device ID	Device certificate (Hanwha Techwin Root CA)
Secure Storage	TPM, SDcard partition encrypt
Security Certificate	TPM with FIPS 140-2 level 2

General	
Webpage Language	English, Korean, Chinese, French, Italian, Spanish, German, Japanese, Russian, Portuguese, Czech, Polish, Turkish, Dutch, Hungarian, Greek
Edge Storage	Micro SD/SDHC/SDXC 2slot Max. 512GB(256GBx2)
Memory	4096MB RAM, 512MB Flash

Environmental & Electrical	
Operating Temperature / Humidity	-25°C ~ +50°C (-13°F ~ +122°F) / Less than 90% RH
Storage Temperature / Humidity	-50°C ~ +60°C(-58°F ~ +140°F) / Less than 90% RH
Certification	IP52, IK10, Plenum rate
Input Voltage	PoE+(IEEE802.3at), 12VDC
Power Consumption	PoE+: Max 19.50W, typical 16.00W 12VDC: Max 17.00W, typical 13.50W

Mechanical	
Color / Material	White / Aluminum, Hard-coated dome bubble
RAL Code	RAL9003
Product Dimensions / Weight	Ø205x163mm(8.07x4.92"), 1.95Kg(4.30lb)

DORI (EN62676-4 standard)	
Detect (25PPM/ 8PPF)	Wide: 30.0m(98.43ft) / Tele: 95.0m(311.82ft)
Observe (63PPM/ 19PPF)	Wide: 12.0m(39.37ft) / Tele: 38.0m(124.73ft)
Recognize (125PPM/ 38PPF)	Wide: 6.0m(19.69ft) / Tele: 19.0m(62.36ft)
Identify (250PPM/ 76PPF)	Wide: 3.0m(9.84ft) / Tele: 9.5m(31.18ft)

Design and specifications are subject to change without notice. The latest product information / specification can be found at HanwhaVision.com.
Hanwha Vision is formerly known as Hanwha Techwin.

© Hanwha Vision CO., LTD. All rights reserved.

PND-A6081RF

2MP AI IR Dome Camera

CAD

Unit:mm [inch]

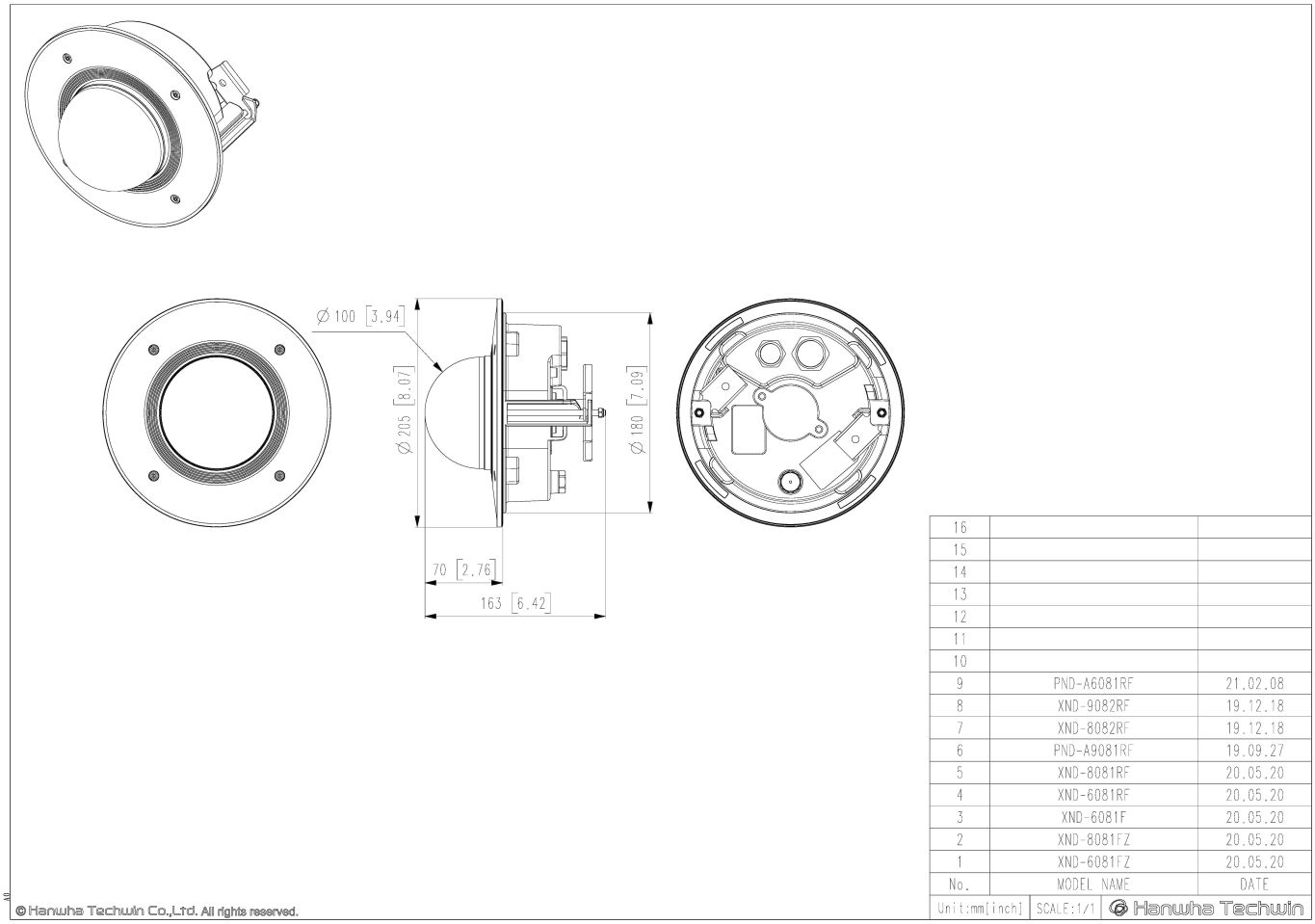

No.	MODEL NAME	DATE
16		
15		
14		
13		
12		
11		
10		
9	PND-A6081RF	21.02.08
8	XND-9082RF	19.12.18
7	XND-8082RF	19.12.18
6	PND-A9081RF	19.09.27
5	XND-8081RF	20.05.20
4	XND-6081RF	20.05.20
3	XND-6081F	20.05.20
2	XND-8081FZ	20.05.20
1	XND-6081FZ	20.05.20

Unit:mm[inch] | SCALE:1/1 | Hanwha Techwin

Design and specifications are subject to change without notice. The latest product information / specification can be found at HanwhaVision.com.
Hanwha Vision is formerly known as Hanwha Techwin.

© Hanwha Vision CO., LTD. All rights reserved.